NONINVERTING AND INVERTING AMPLIFIER

OPERATIONAL AMPLIFIER

prepared by:

Gyro A. Madrona

Electronics Engineer

GRADING SYSTEM

FINAL GRADE

30%

PRELIM

30%

MIDTERM

40%

ENDTERM

TERM GRADE

50%

EXAM

50%

LABORATORY

PENALTY

0

ABSENT

3

45-min LATE

5 max

15-min LATE

TOPIC OUTLINE

Noninverting Amplifier

Inverting Amplifier

Summing Amplifier

NONINVERTING AMPLIFIER

Virtual Short

Since $v^+ \approx v^-$

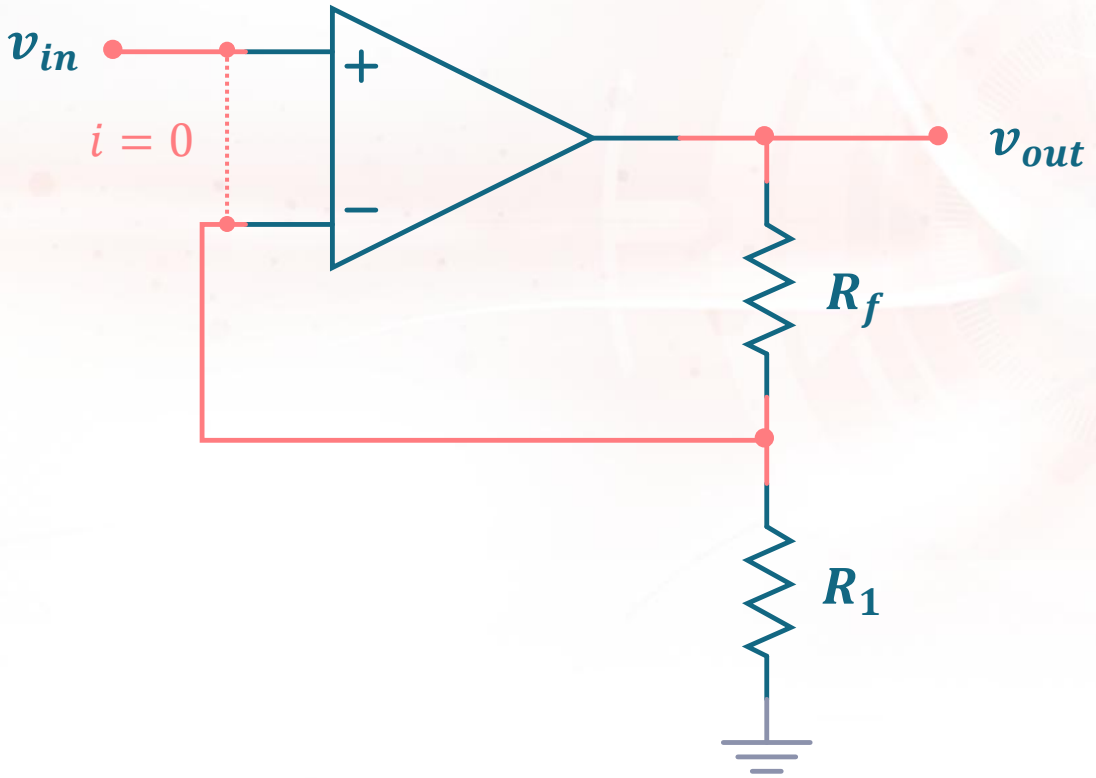

$$v_{in} = v_{out}\frac{R_1}{R_1 + R_f}$$

$$v_{out} = v_{in}\frac{R_1 + R_f}{R_1}$$

$$v_{out} = v_{in}\left(\frac{R_f}{R_1} + 1\right)$$

What is the **closed-loop gain** and the **output voltage** of the given **op-amp** circuit?

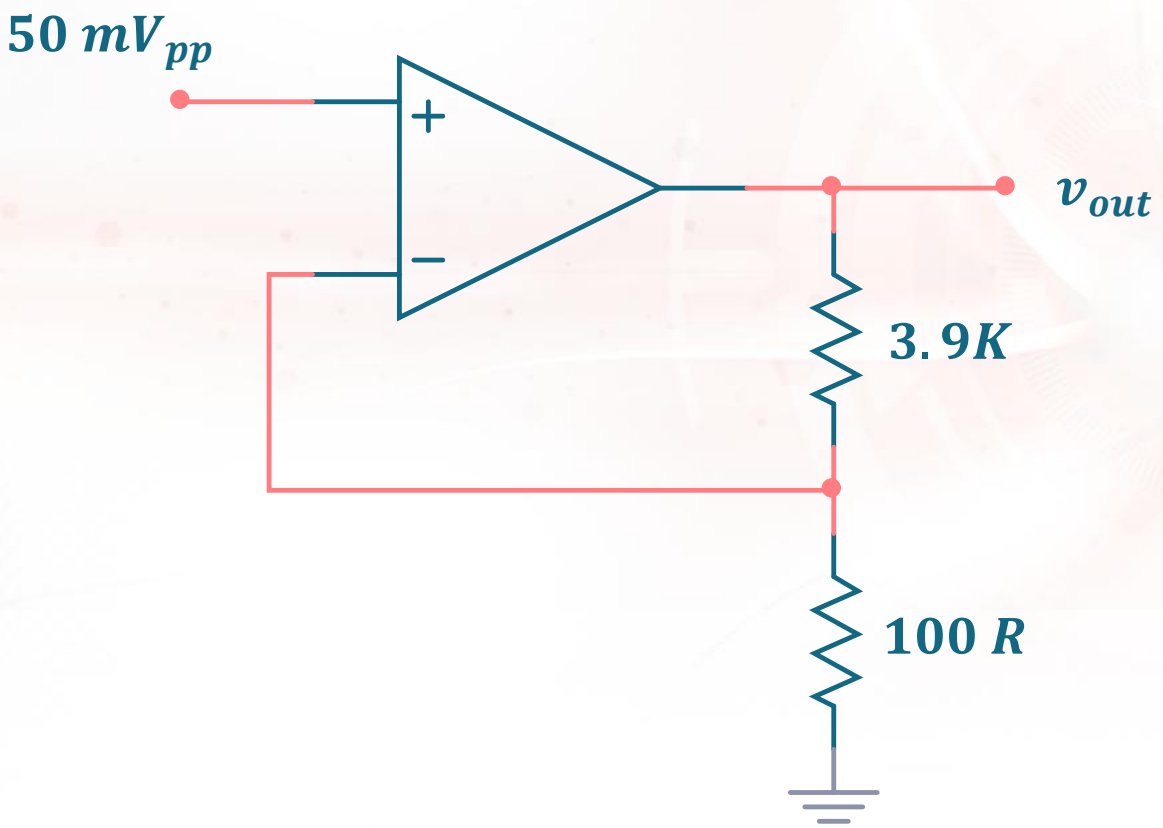

What is the **closed-loop gain** and the **output voltage** of the given **op-amp** circuit?

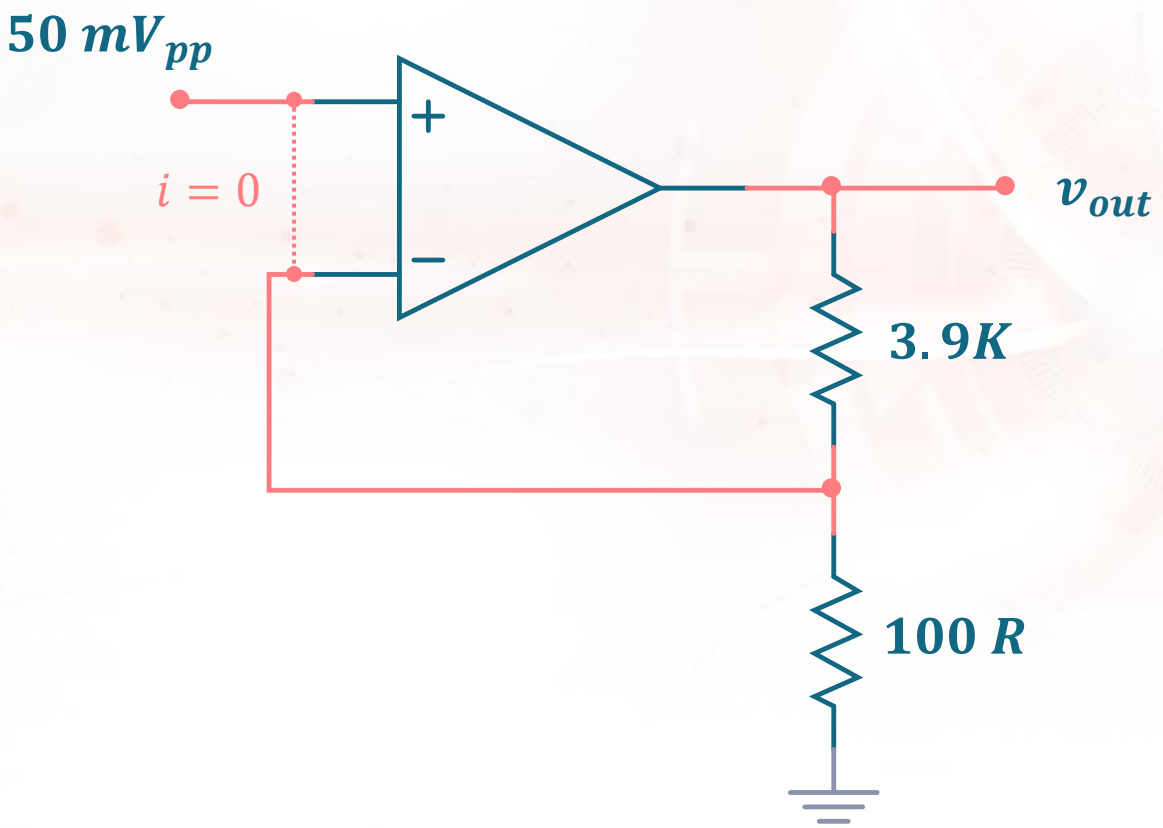

$$v_{in} = v_{out}\frac{R_1}{R_1 + R_f}$$

$$\frac{v_{in}}{v_{out}} = \frac{R_1}{R_1 + R_f}$$

$$\frac{v_{out}}{v_{in}} = \frac{R_1 + R_f}{R_1}$$

$$A = 1 + \frac{R_f}{R_1}$$

$$A = 1 + \frac{3.9\ K}{100\ R}$$

$$\boxed{A = 40}$$

ans

What is the **closed-loop gain** and the **output voltage** of the given **op-amp** circuit?

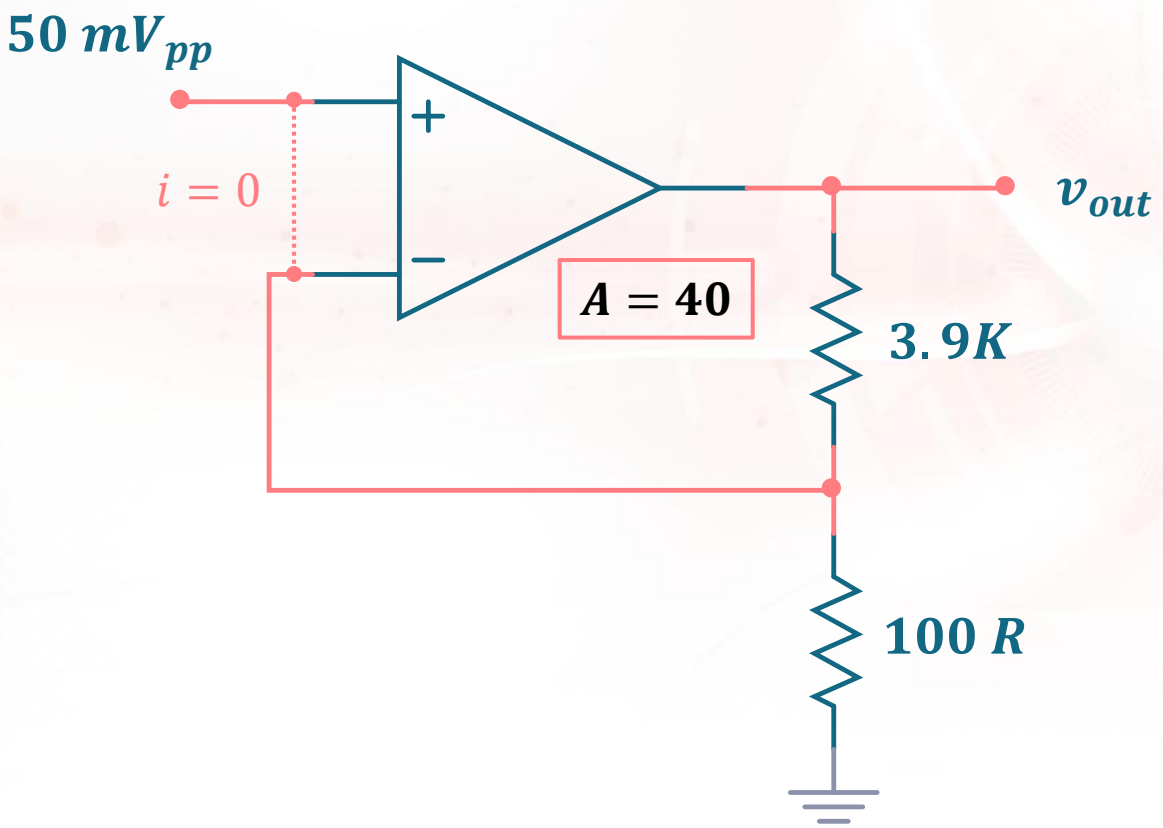

$$v_{out} = Av_{in}$$

$$v_{out} = 40(50\ mV_{PP})$$

$$\boxed{v_{out} = 2\ V_{pp}}$$

ans

INVERTING AMPLIFIER

Virtual Ground

Since $v^+ \approx v^-$

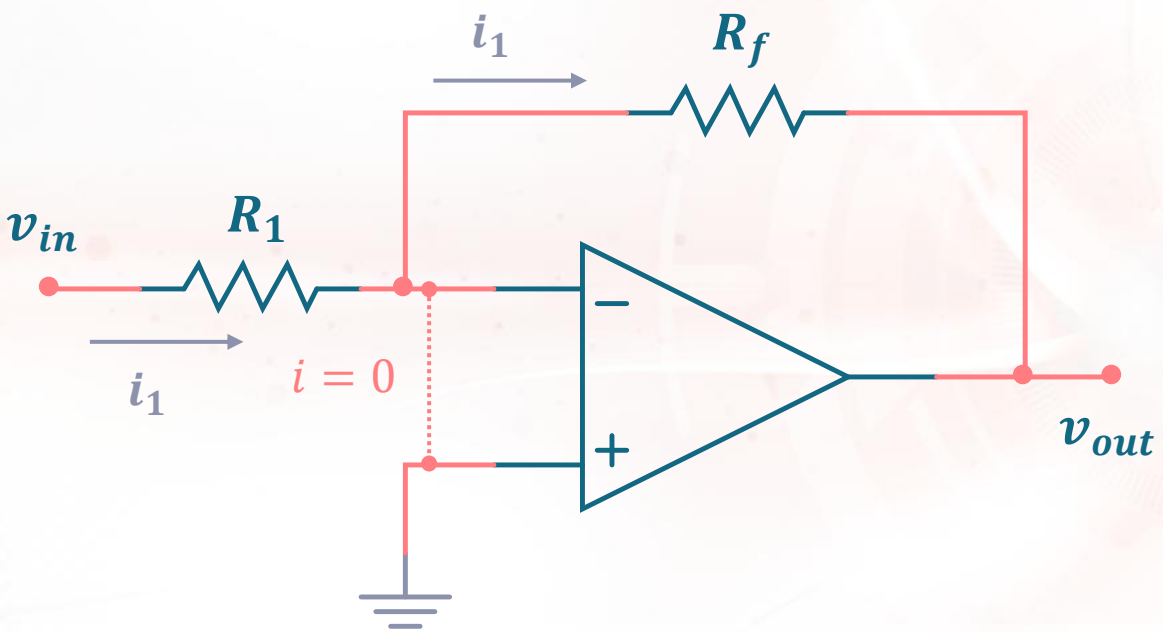

Node Method

$$v_{in} - 0 = v_1$$

$$v_{in} = i_1 R_1$$

$$0 - v_{out} = i_1 R_f$$

$$v_{out} = -i_1 R_f$$

$$A = \frac{v_{out}}{v_{in}}$$

$$A = \frac{-i_1 R_f}{i_1 R_1}$$

Virtual Ground

Since $v^+ \approx v^-$

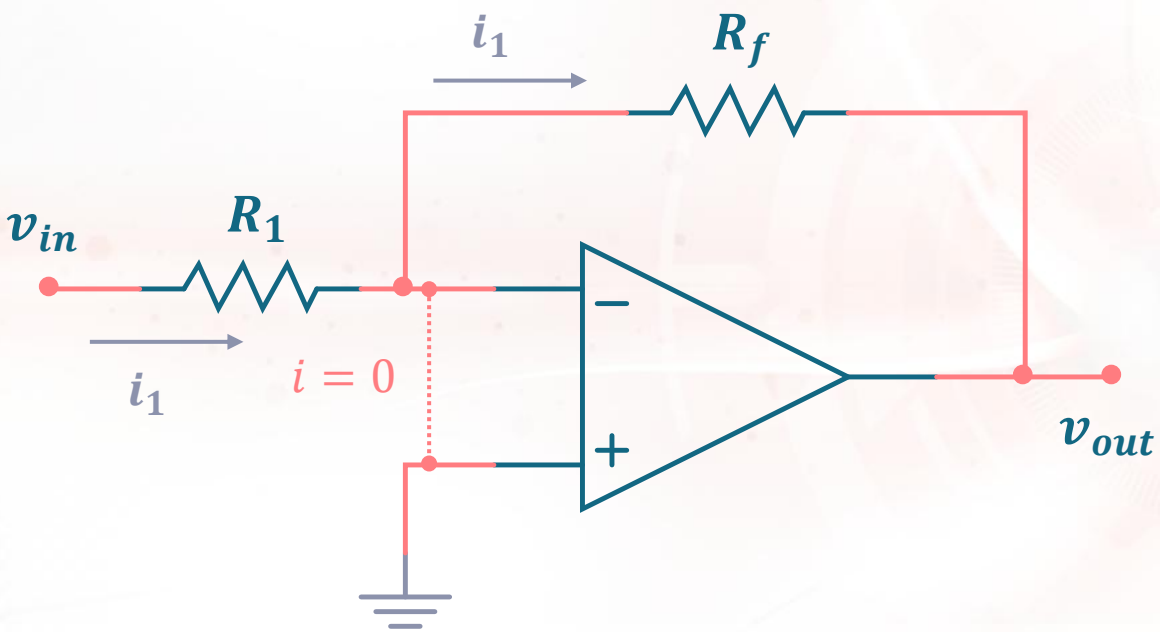

$$A = -\frac{R_f}{R_1}$$

$$v_{out} = Av_{in}$$

$$v_{out} = -v_{in}\left(\frac{R_f}{R_1}\right)$$

What is the **closed-loop gain** and the **output voltage** of the given **op-amp** circuit?

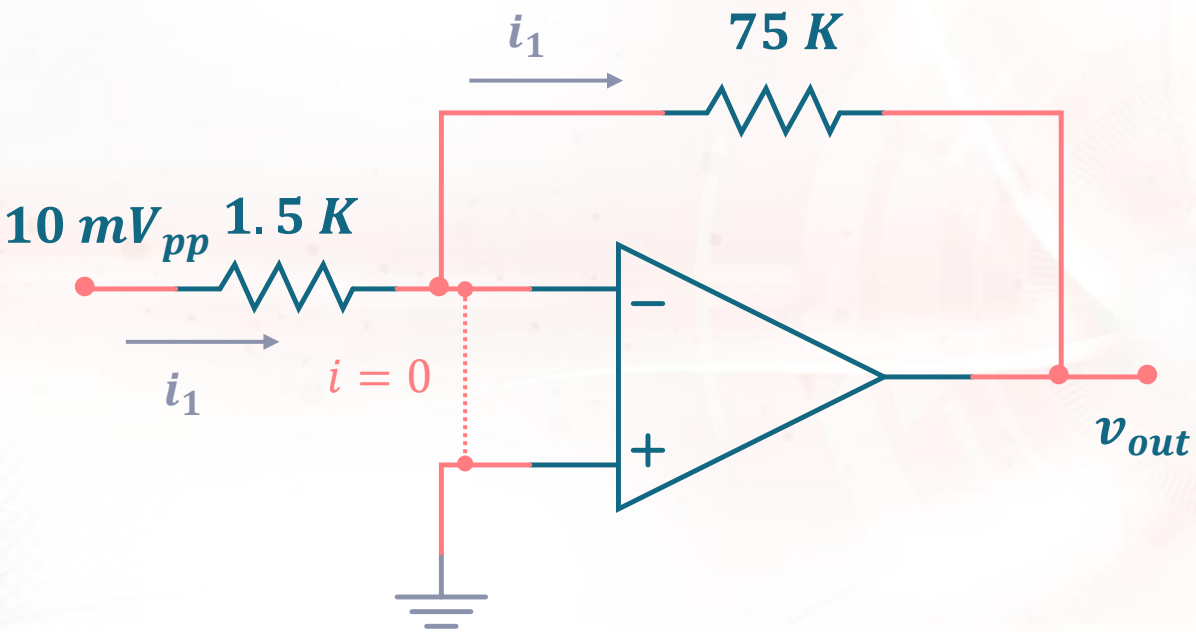

Node Method

$$v_{in} - 0 = v_1$$

$$v_{in} = i_1 R_1$$

$$0 - v_{out} = i_1 R_f$$

$$v_{out} = -i_1 R_f$$

$$A = \frac{v_{out}}{v_{in}}$$

$$A = \frac{-i_1 R_f}{i_1 R_1}$$

What is the **closed-loop gain** and the **output voltage** of the given **op-amp** circuit?

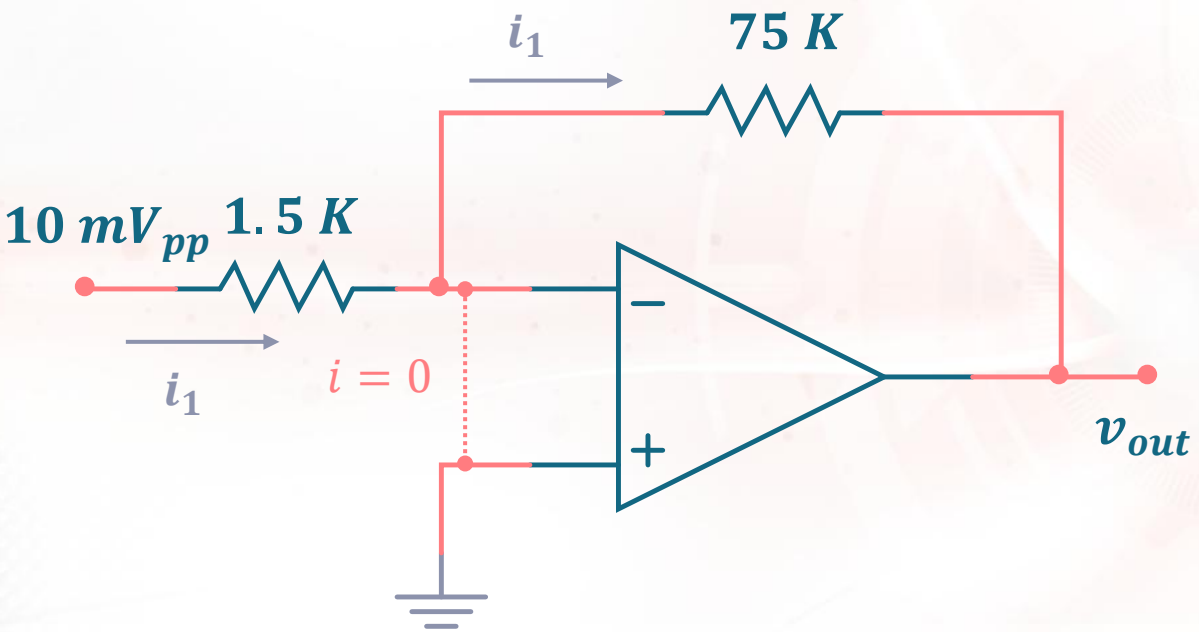

$$A = -\frac{R_f}{R_1}$$

$$A = -\frac{75\ K}{1.5\ K}$$

$$\boxed{A = -50}$$

ans

$$v_{out} = Av_{in}$$

$$v_{out} = -50(10\ mV_{pp})$$

$$\boxed{v_{out} = -500\ mV_{pp}}$$

ans

SUMMING AMPLIFIER

Virtual Ground

Since $v^+ \approx v^-$

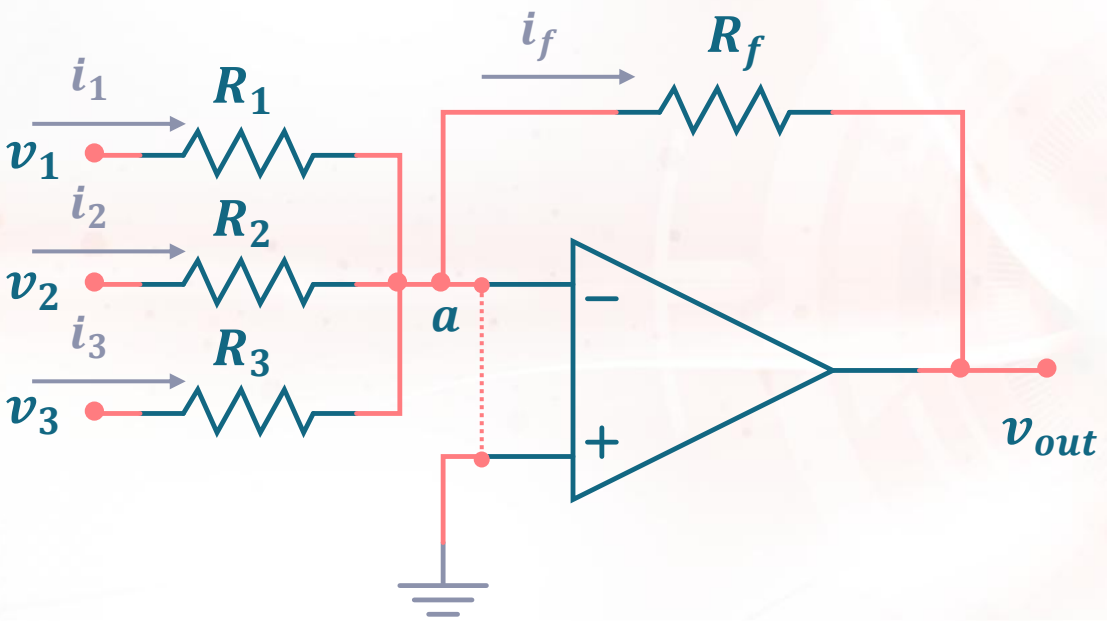

KCL @ a

$$-i_1 - i_2 - i_3 + i_f = 0$$

$$-(i_1 + i_2 + i_3) = -i_f$$

$$-\left(\frac{v_1 - 0}{R_1} + \frac{v_2 - 0}{R_2} + \frac{v_3 - 0}{R_2}\right) = -\frac{0 - v_{out}}{R_f}$$

$$-\left(\frac{v_1}{R_1} + \frac{v_2}{R_2} + \frac{v_3}{R_2}\right) = \frac{v_{out}}{R_f}$$

$$v_{out} = -\left(v_1 \frac{R_f}{R_1} + v_2 \frac{R_f}{R_1} + v_3 \frac{R_f}{R_1}\right)$$

What is the **closed-loop gain** and the **output voltage** of the given **op-amp** circuit?

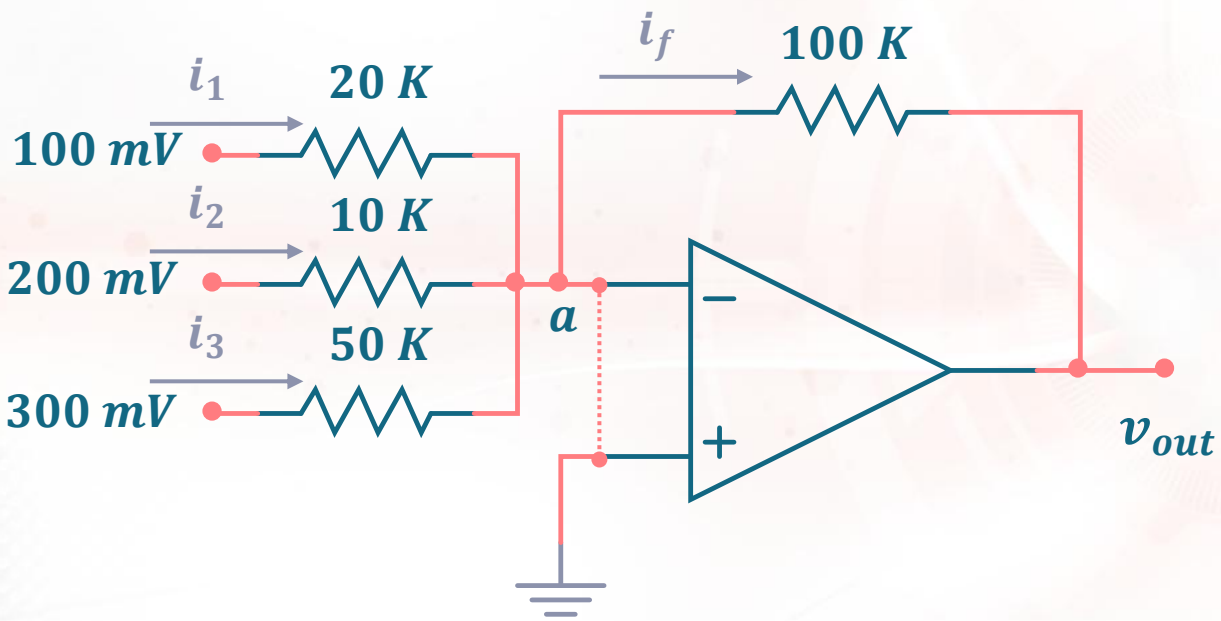

KCL @ a

$$-i_1 - i_2 - i_3 + i_f = 0$$

$$-(i_1 + i_2 + i_3) = -i_f$$

$$-\left(\frac{v_1 - 0}{R_1} + \frac{v_2 - 0}{R_2} + \frac{v_3 - 0}{R_3}\right) = -\frac{0 - v_{out}}{R_f}$$

$$-\left(\frac{v_1}{R_1} + \frac{v_2}{R_2} + \frac{v_3}{R_3}\right) = \frac{v_{out}}{R_f}$$

$$v_{out} = -\left(v_1\frac{R_f}{R_1} + v_2\frac{R_f}{R_2} + v_3\frac{R_f}{R_3}\right)$$

What is the **closed-loop gain** and the **output voltage** of the given **op-amp** circuit?

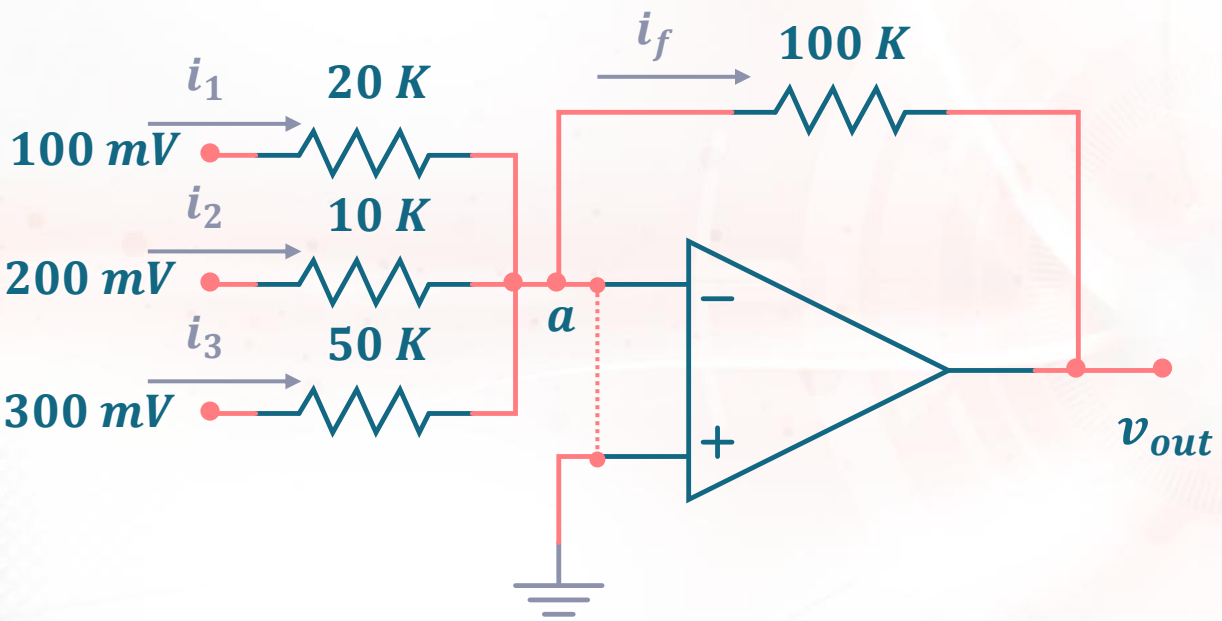

$$v_{out} = -\left(v_1 \frac{R_f}{R_1} + v_2 \frac{R_f}{R_2} + v_3 \frac{R_f}{R_3}\right)$$

$$A_1 = -\frac{R_f}{R_1}$$

$$A_1 = -\frac{100\ K}{20\ K}$$

$$\boxed{A_1 = -5}$$

ans

What is the **closed-loop gain** and the **output voltage** of the given **op-amp** circuit?

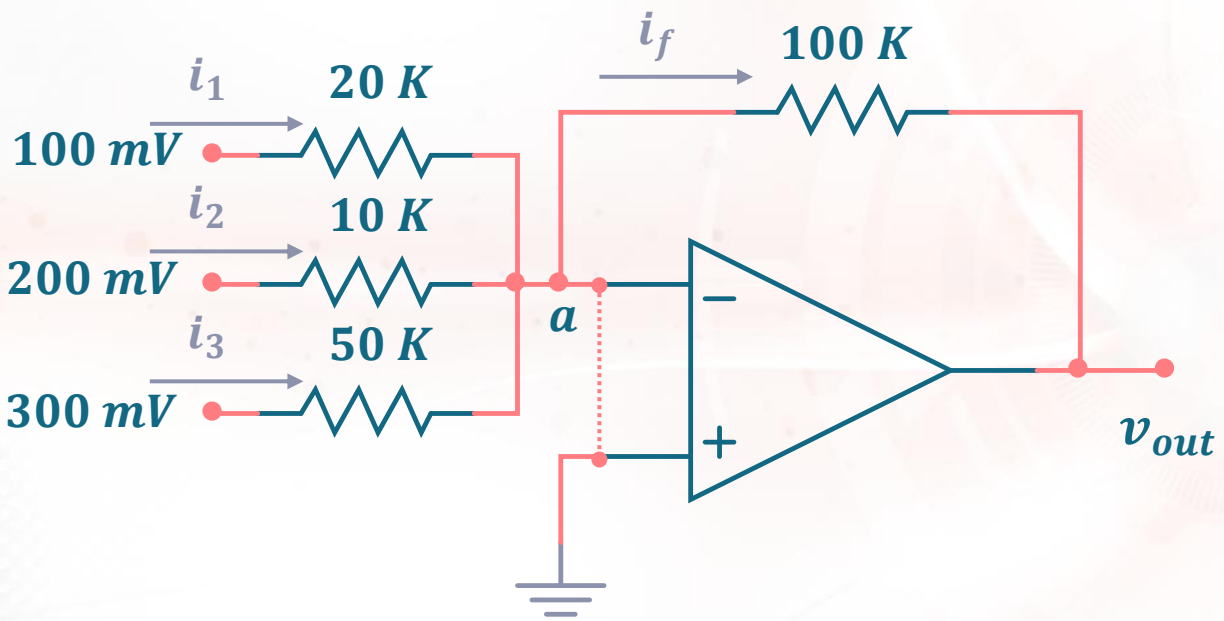

$$v_{out} = -\left(v_1 \frac{R_f}{R_1} + v_2 \frac{R_f}{R_2} + v_3 \frac{R_f}{R_3}\right)$$

$$A_2 = -\frac{R_f}{R_2}$$

$$A_2 = -\frac{100\ K}{10\ K}$$

$$\boxed{A_2 = -10}$$

ans

What is the **closed-loop gain** and the **output voltage** of the given **op-amp** circuit?

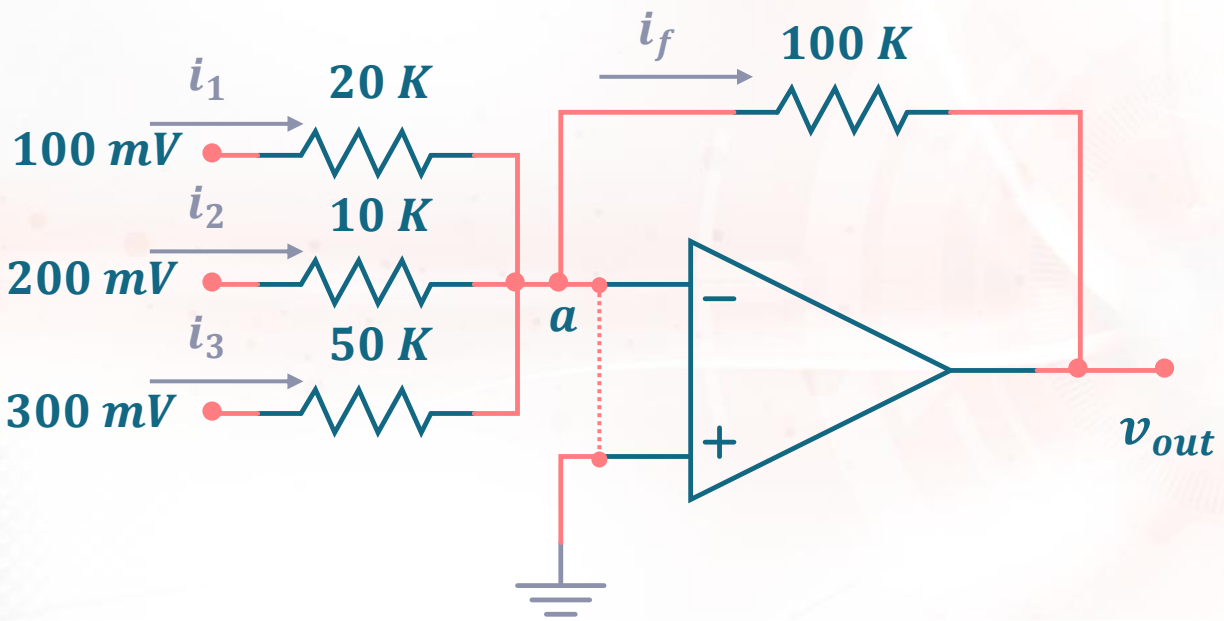

$$v_{out} = -\left(v_1 \frac{R_f}{R_1} + v_2 \frac{R_f}{R_2} + v_3 \frac{R_f}{R_3}\right)$$

$$A_3 = -\frac{R_f}{R_3}$$

$$A_3 = -\frac{100\ K}{50\ K}$$

$$\boxed{A_3 = -2}$$

ans

What is the **closed-loop gain** and the **output voltage** of the given **op-amp** circuit?

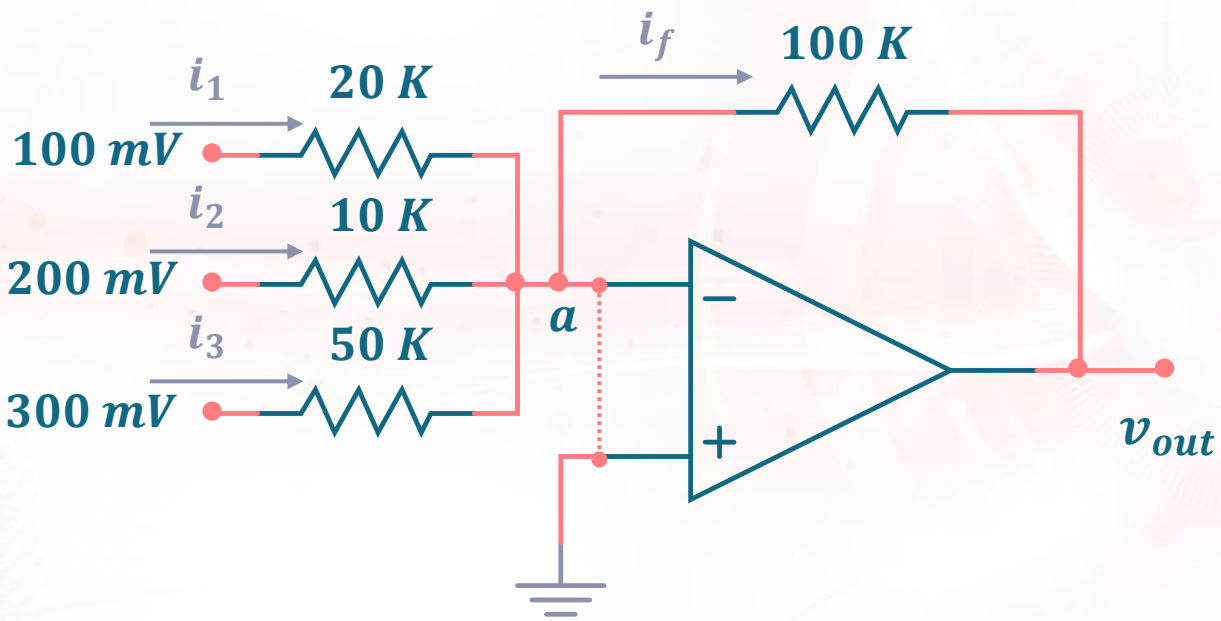

$$v_{out} = -\left(v_1 \frac{R_f}{R_1} + v_2 \frac{R_f}{R_2} + v_3 \frac{R_f}{R_3}\right)$$

$$v_{out} = -(v_1 A_1 + v_2 A_2 + v_3 A_3)$$

$$v_{out} = -\big(100\ mV\ (5) + 200\ mV(10) + 300\ mV(2)\big)$$

$$\boxed{v_{out} = -3.1\ V}$$

ans

LABORATORY